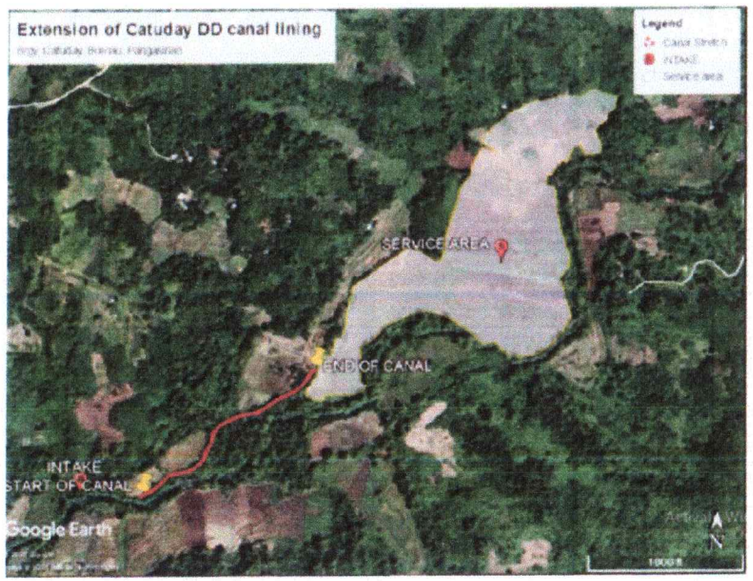

VICINITY MAP

SCALE NTS

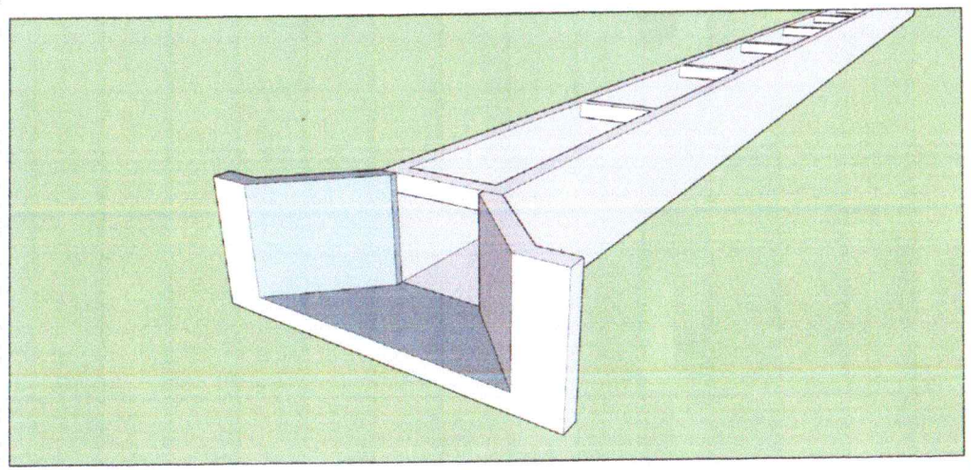

PERSPECTIVE VIEW

SCALE NTS

PREPARED FROM THE OFFICE OF THE	PROJECT TITLE	PREPARED BY	CHECKED & REVIEWED BY	RECOMMENDING APPROVAL	APPROVED	SHEET CONTENTS	SHEET NO
REPUBLIC OF THE PHILIPPINES **DEPARTMENT OF AGRICULTURE** REGIONAL FIELD OFFICE NO. 1 **REGIONAL AGRICULTURAL ENGINEERING DIVISION**	CONCRETING/IMPROVEMENT OF CATUDAY DD CANAL LINING LOCATION: BROY, CATUDAY, BOLINAO PANGASINAN	MARLO A. SUGUITAN, ABE Engineer I, RAED	JOYLENE G. BUNGUBUNG, ABE Senior Civil Engineer, RAED	DENNIS I. LACTAC, ASEAN Eng Chief RAED	NESTOR D. DOMENDEN, CESO IV OIC-Regional Executive Director	VICINITY MAP PERSPECTIVE VIEW	1 3

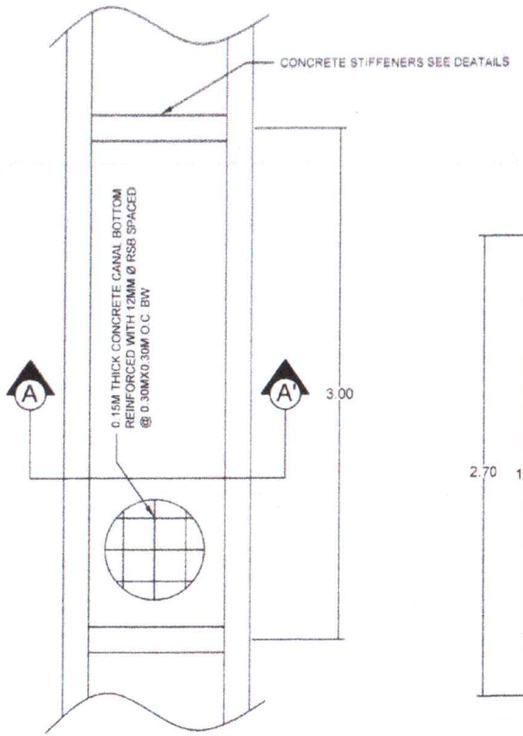

LEGEND:

BACKFILL | CONCRETE | NATURAL GRADE

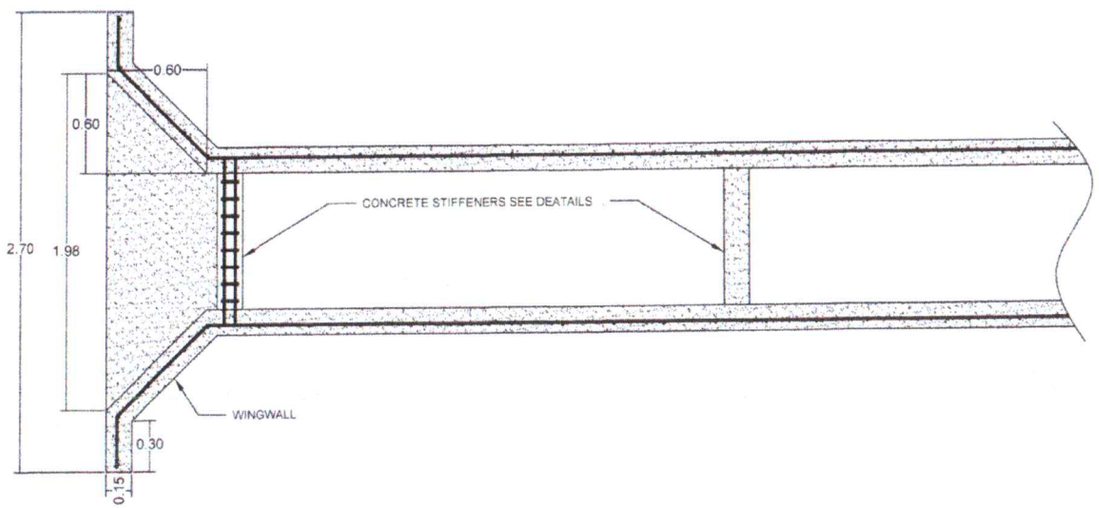

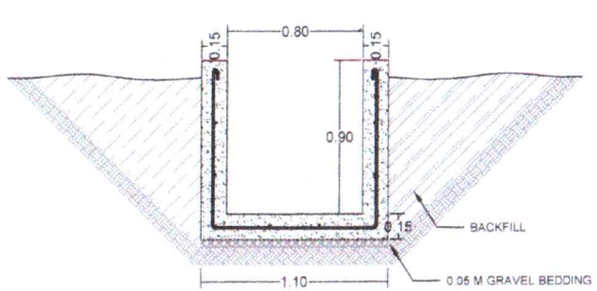

SECTION THRU A-A'

SCALE 1:30M

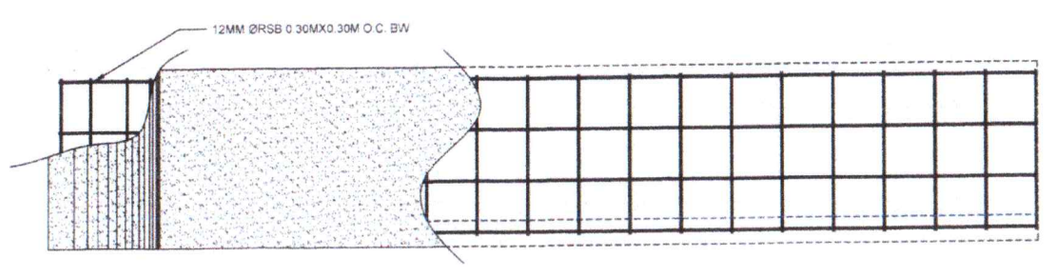

PLAN OF CONCRETE CANAL

SCALE 1:30M

PREPARED FROM THE OFFICE OF THE:	PROJECT TITLE	PREPARED BY	CHECKED & REVIEWED BY	RECOMMENDING APPROVAL	APPROVED	SHEET CONTENTS	SHEET NO.
DEPARTMENT OF AGRICULTURE REGIONAL FIELD OFFICE NO. 1 REGIONAL AGRICULTURAL ENGINEERING DIVISION	CONCRETING/IMPROVEMENT OF CATUDAY DD CANAL LINING LOCATION: BROY. CATUDAY, BOLINAO, PANGASINAN	MARLO A. SUGUITAN, ABE Engineer II (ICT)	JOYLENE G. BENGUBUNG, ABE Section Chief, ICT	DENNIS I. TACTAC, ASEAN Eng Chief, ICT	NESTOR B. DOMENDEN, CESO IV Regional Executive Director	PLAN OF CONCRETE CANAL	2/3

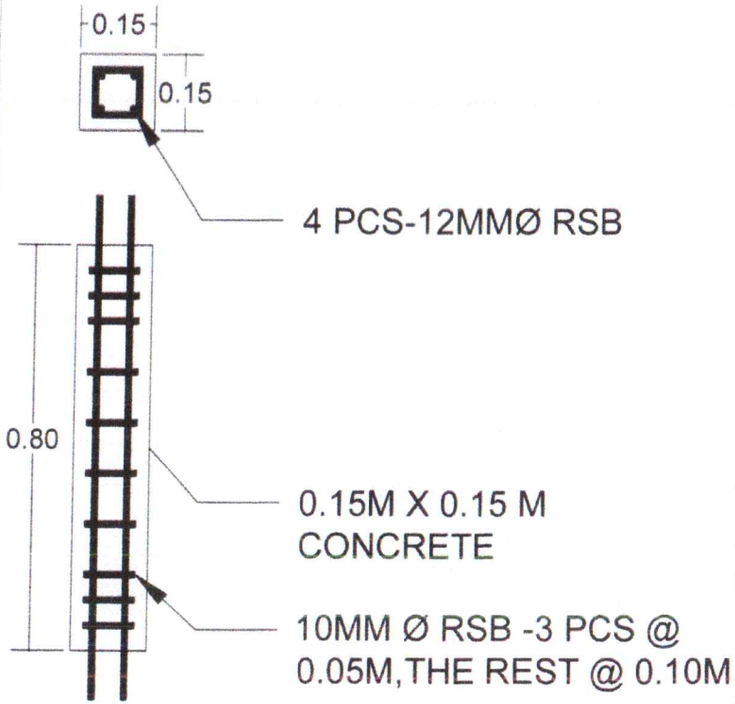

CONCRETE STIFFENER DETAILS

SCALE 1:10M

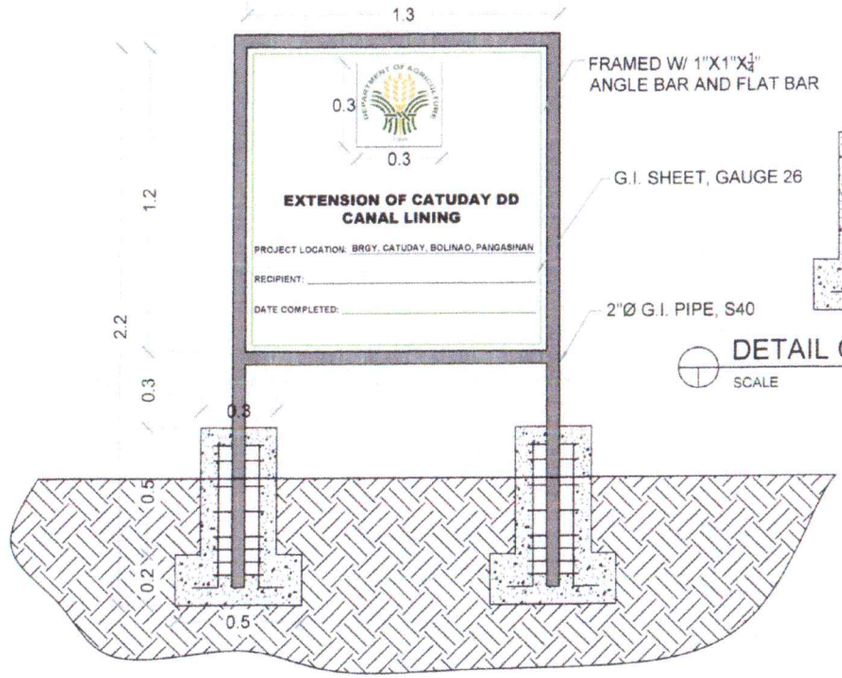

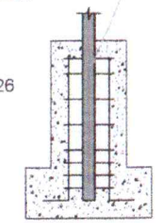

DETAIL CONCRETE POST

SCALE 1:20

MARKER PLAN

SCALE 1:20

PREPARED FROM THE OFFICE OF THE	PROJECT TITLE	PREPARED BY	CHECKED & REVIEWED BY	RECOMMENDING APPROVAL	APPROVED	SHEET CONTENTS	SHEET NO
REPUBLIC OF THE PHILIPPINES DEPARTMENT OF AGRICULTURE REGIONAL FIELD OFFICE NO. 1 REGIONAL AGRICULTURAL ENGINEERING DIVISION	CONCRETING/IMPROVEMENT OF CATUDAY DD CANAL LINING LOCATION: BRGY. CATUDAY, BOLINAO PANGASINAN	MARLO A. SUGUITAN, ABE Engineer II, RAED	JOYLENE G. BUNGEBUNG, ABE Senior Chief RAED	DENNIS E. TACTAC, ASEAN Eng Chief, RAED	NESTOR D. DOMENDEN, CESO IV Regional Executive Director	CONCRETE STIFFENER DETAILS PROJECT MARKER	3/3